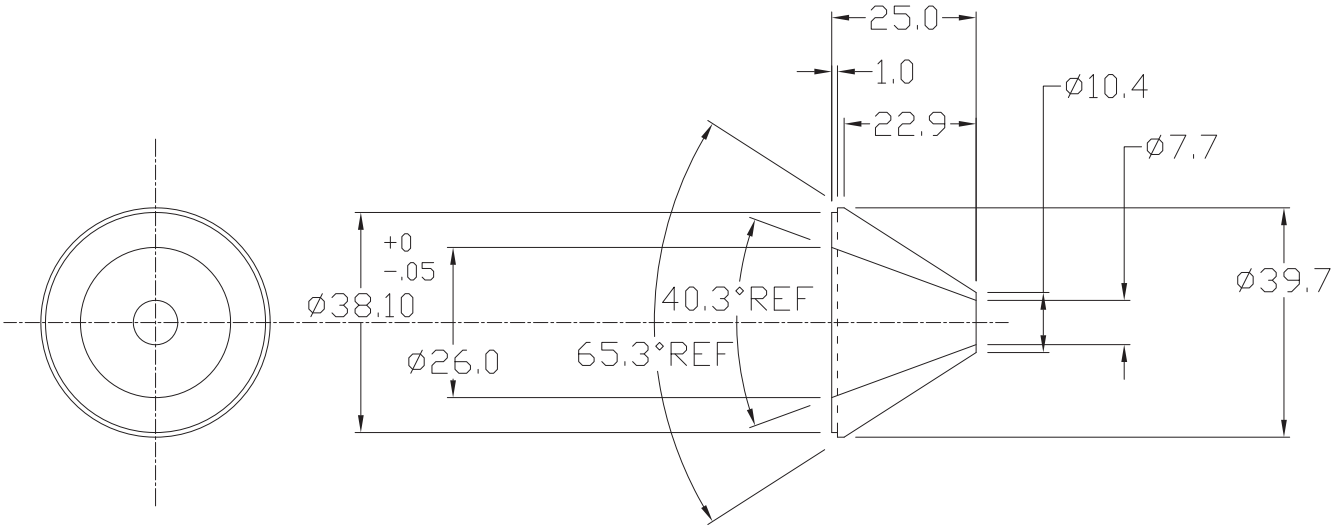

NANOPROBE BEAMLINE
SDD 4EL COLLIMATOR
30-5 MM CAP
MATL: ALUMINUM 99.8% PURE
1 REQ'D
COST CODE 58838-00-153
3/17/2008, C. BENSON